Ella Bagchi
Shaker High School
Albany, NY USA
Yemen, Sustainable Agriculture
9/1/2026

**Community Agrivoltaics Initiative (CAVI) in Yemen: food security, sustainability, and economic independence for small-scale farmers**

***Background: the Entanglement of History, Politics, and Agriculture***

Yemen is one of the oldest countries in the Middle East, housing a rich, ancient history filled with stories of daring sailors, praise from the proud Romans, and an aromatic record of success in the trading of coffee, frankincense, and myrrh. This nation contains five magnificent UNESCO world heritage sites and displays a vast culture. Today, against the majestic backdrop of the Old City of Sana'a, Yemen's culture, history, and people are threatened by civil war and climate crisis.

Despite efforts from the UN and organizations within Yemen to achieve peace, Yemen suffers from a violent civil war. While the legally recognized government in Yemen is the Presidential Leadership Council (PLC), the rebel Houthi group has the most control over the Yemeni government. The conflict in Yemen has also become a proxy war for Saudi Arabia and Iran, as the PLC and Houthis are funded, recognized, and armed by Saudi Arabia and Iran, respectively (United Nations Foundation).

The population of Yemen was reported to be 40.58 million people in 2024, with 63% of Yemenis living in rural areas ("Total Population Yemen| Statista"), ("Rural Population (% of Total Population) - Yemen, Rep. | Data"). Yemen lies in the south west Arabian peninsula, bordering Oman, Saudi Arabia, and the Red Sea. It has a hot, arid climate, and consists of desert and mountains (Burrowes and Wenner). Because of its inhospitable climate, only 2.2% of Yemen's land is arable (as of 2023) ("Arable Land (% of Land Area) - Yemen, Rep. | Data").

Most Yemeni farmers grow cereals such as sorghum, maize, barley, millet, and wheat. The average farm size in Yemen is very small: 62% of farms are under 2 hectares, and only 4% are over 10 hectares ("Yemen - WOAH - Middle East"). Difficult farming in Yemen proves to be a challenge for most of Yemen's population, as most of Yemen's jobs are as crop growers ("Generating New Employment Opportunities in Yemen"). Conflict has made finding and keeping a job difficult for most Yemenis, creating widespread poverty and contributing to food insecurity.

The average wage in Yemen in 2014 was 52,500 Yemeni Rials (US $244), and has likely gone down since then. Poverty and economic instability contribute to food insecurity in Yemen, as fruits, vegetables, and meats become luxuries– the prices in local markets, where most Yemenis get their food, are out of reach for most families. The most accessible foods are cereal grains and bread, often in portions that are insufficient for the average 6-person rural Yemeni household (EXECUTIVE SUMMARY). A 2018

survey of a typical Yemeni family reveals the diet of most Yemenis: bread and tea for breakfast, aseed (a mixture of wheat, water, and salt) for lunch, and bread for dinner. Each member of the surveyed family consumed 500 calories per day, which is less than a quarter of the number of calories necessary for a healthy diet ("A Packet of Rice for a Family of Nine: Why Yemenis Are Starving"). The occasional portion of fava beans is likely the most nutritious aspect of a typical Yemeni diet today.

***Challenge and Impact: Climate Crisis in the Context of Conflict***

Yemen is engulfed in one of the world's worst humanitarian crises, with about 17 million people suffering from food insecurity, and more sinking into poverty as the effects of conflict and climate change worsen in Yemen. The main causes of hunger in Yemen are the civil war, weakened economy, and intense droughts due to climate change ("🇾🇪 Yemen ⚠️ Hunger Crisis from Civil War"). The challenge addressed in this paper is focused on climate change-induced food insecurity in the context of conflict and poverty.

Climate change has caused unpredictable, severe, and increasingly frequent climate events in Yemen, presenting Yemeni families with major obstacles in Yemen's already challenging farm production. From 2008-2011, Yemen oscillated from periods of extreme flooding and extreme drought, and from 2015-2018, Yemen weathered the deadly effects of Cyclone Chapala ("🇾🇪 Yemen ⚠️ Hunger Crisis from Civil War"). These events destroy crops, cause water scarcity, create food insecurity, wear down the soil, contribute to desertification, and make the land and its people more vulnerable to future catastrophes.

***Exploring Solutions: Live-saving Efforts Amid an Ominous Future***

As conflict continues, the economy wavers, and the effects of climate change intensify, the situation in Yemen worsens. In the midst of this crisis, the urgent needs of the people become the top priority, sometimes overshadowing preparations for the future and long-term solutions– this is understandable, and in most cases, the necessary course of action. For example, the World Food Program provides cash and food assistance, supplies school lunches, and creates nutrition-packed foods for malnourished children in order to address the urgent needs of food-insecure Yemeni families (World Food Programme). These solutions are critical to Yemen's survival, and can be relatively short-term.

While national, international, and non-governmental organizations handle the majority of the civil war and national economic instability in Yemen, the issue of climate change should be brought to the forefront when creating long-term solutions for this country. Plans for the future of Yemen must be focused on now, as organizations like Yemen Aid are striving to do: Yemen Aid provides plows and seeds for farmers, distributes crop kits, and strives to preserve the environment through crop diversification efforts and investment in sustainable practices (Aid). National organizations, along with local efforts, can work together to build on environmentally sustainable, long-lasting solutions.

***CAVI: a path towards food security, sustainability, and independence***

A civil war-turned-proxy war, the devaluing of the Yemeni currency, and the attacks of Houthis and Yemeni forces alike are tragedies that can feel wholly out of the control of the typical Yemeni family. The psychological burden of these issues can prove to be overbearing; families feel helpless while their schools are attacked, their children starve, their grandmothers sacrifice meals, and their history and culture are brutally chiseled away at. While violent battles rage in the streets, the hidden battle against climate change looms as an equally dangerous threat. However, unlike political conflict, the path towards resilience and adaptability during the climate crisis should be within the control of Yemeni communities. With proper support and resources, Yemenis can regain agency over a currently unstable agricultural life, and forge the path to a future of their choosing.

In order to prepare for future climate shocks, create a more food-secure future for Yemeni families, and blaze a trail towards sustainability, Yemen should expand its investment in sustainable agriculture and introduce more technology to farming by adopting the Community Agrivoltaics Initiative (CAVI).

***What is agrivoltaics?***

Agrivoltaics is an ambitious but rewarding form of sustainable agriculture that can provide clean electricity to farmers while heightening the efficiency of growing crops. Rows of solar panels are installed directly on top of farms, where they produce photovoltaic energy and shade plants from the overbearing Yemeni sun at the same time. This strategic placement of solar panels optimizes land use and can allow Yemeni farmers to grow crops that are sensitive to high levels of sunlight– with Yemen's small farms and hot, sunny climate, this solution can be especially effective ("Agrivoltaics: Coming Soon to a Farm near You? | USDA Climate Hubs"), (Abdalla et al.). Agrivoltaics opens the door to greatly diversifying Yemen's crops, as farmers may be able to grow temperate fruits and vegetables to balance their usual diet.

While agrivoltaics both generates solar energy and helps crops to grow, the focus of CAVI is agriculture. There are tradeoffs in every agrivoltaics system between maximizing energy output versus crop output– both cannot be optimized at the same time. CAVI maximizes crop output by arranging solar panels in a way that caters to the crops; this means higher panel heights, wider spacing between rows of panels, and greater spacing between panel columns ("'Agrivoltaics Designs and Configurations'").

***Building on existing efforts: an international-local partnership***

The first step of CAVI is to build upon local efforts and international assistance that already exists. Thus, CAVI will begin in the Lahj governorate of Yemen, where the UNDP (United Nations Development Program) has already helped small-scale Yemeni farmers to install drip irrigation systems ("UNDP Yemen: Strengthening Local Systems for Sustainable Food Security in Yemen"). This solution was well-received by these Yemeni farmers, making it more likely that people in this region will be open to participating in and leading CAVI. With a successful drip irrigation system already established in parts of the Lahj governorate, farmers can continue to build sustainable practices by introducing CAVI as well.

***Components of a CAVI farm:***

- Food crops

Crops that grow well in partial shade, such as spinach, potatoes, carrots, and peppers, should be grown on CAVI farms. This will maximize crop yield.

- Solar panels (Fig. 2)

CAVI uses SunPower-X21-335 (mono-crystalline Silicon) solar panels, which is what Barron-Gafford et al. used in their agrivoltaics study in Arizona (which has a hot, dry climate like most of Yemen). CAVI farmers can expect to get around 373 to 377 mWh of energy per year from these panels (Barron-Gafford et al.).

- Monitoring system and data collection

CAVI farms monitor and collect data on ambient air temperature, relative humidity, solar panel temperature, and harvest yields. All variables (except for harvest yields, which Yemeni farmers will record) will be automatically measured by technology on the solar panel complexes.

- Battery-inverter complex (Fig. 3)

The battery stores the solar energy that is absorbed by the solar panels. The inverter converts energy from the sun into energy that people can use for electricity.

The flow of energy is as follows:
Sun → absorbed by solar panel → inverter converts to usable energy → energy is stored in battery → energy transferred to off-grid system → Yemeni families access off-grid system to power their homes sustainably.

**Measurements within a CAVI farm**

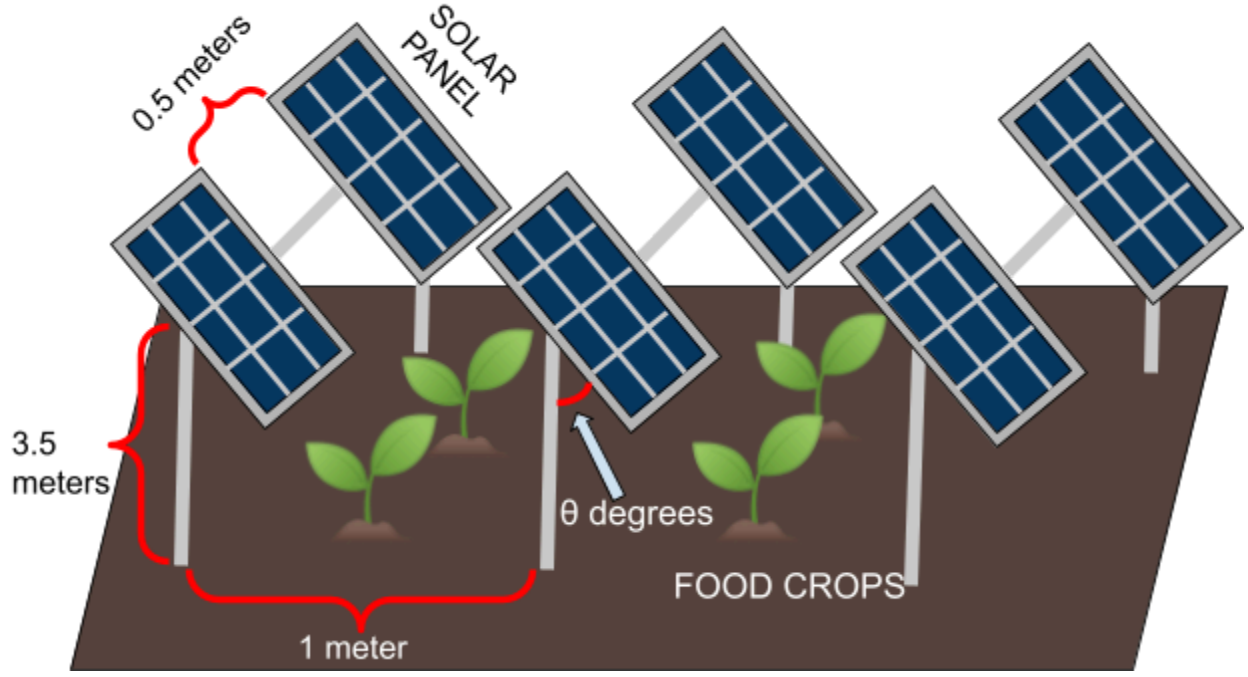

Fig. 1: Measurements for a simplified agrivoltaic system, for one farm, based off of agrivoltaics study from Barron-Gafford et al. The angle θ is equal to the latitude of the location– for somewhere in the Lahj governorate, for example, θ = 13.0567 degrees.

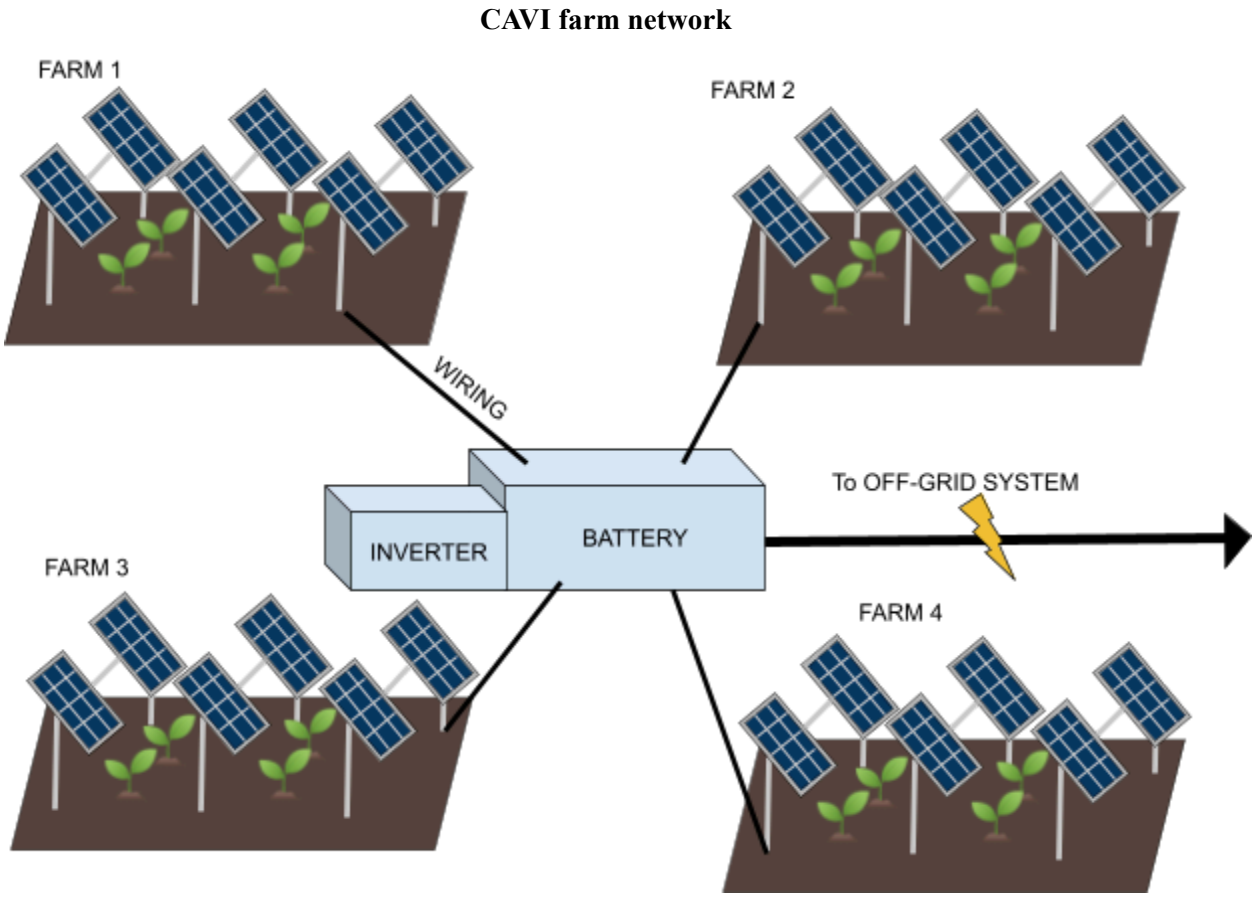


Fig. 2: Community network of agrivoltaic farms. All farms are wired to a single battery-inverter complex, where solar energy is stored and later transferred to an off-grid system. This off-grid system allows Yemeni families to access clean electricity for their homes.

***Potential funding sources:***

CAVI needs extensive, up-front funding to buy solar panels, seeds for crops, and all parts related to the solar energy system. The below organizations may be willing to fund this solution, as they have for similar projects in the past.

- World Food Program
- FAO (Food and Agriculture Organization of the United Nations)
- United Nations Development Programme (UNDP)
- Yemen Aid

Once CAVI is well-established in a village, Yemeni participants can choose to sell the data that they gain from monitoring variables in their community agrivoltaic farms. Environmental researchers and the scientific community as a whole would benefit from this data– if researchers choose to purchase it, it would help progress agrivoltaics research and support Yemeni farmers. Yemeni farmers can use the earnings from selling data to buy more agricultural supplies or to help keep up with solar panel maintenance.

***Steps for implementation (1-year timeline):***

CAVI will apply these steps to villages in the Lahj governorate of Yemen first, and then in the Taiz governorate. Both of these governorates have experience with various UN programs involving sustainable development, making them more likely to want to adopt the CAVI program ("UNDP Yemen: Strengthening Local Systems for Sustainable Food Security in Yemen"), ("Easing Yemen's Food Crisis: Preserving Farmlands in Al-Barakani Valley, Taiz").

1. *Gauge interest for the adoption of CAVI.*

CAVI project managers (international and Yemeni agricultural experts) distribute brochures about CAVI and talk to small-scale farmers within the village. Collect the names of people who are interested. If 25% or more of the village's population is interested, proceed to step 2; if not, regroup and look for another village, or come back to the same village with more information at a different time.

2. *Determine how many battery-inverter complexes are needed within the village, and determine a location for these complexes.*

Farms that are close together will share one battery-inverter complex, which reduces the costs and simplifies the maintenance of the solar panel systems. Determine a few centralized locations where some battery-inverter complexes will be set up and eventually wired to solar panel systems.

3. *Create a map of where all of the solar panel systems, wiring, and battery-inverter complexes will be set up*.

Be aware of other wiring and structures that may be disrupted during this process. This will be led by Yemeni community leaders and CAVI project managers. Final maps must be approved by farmers and affected community members before continuing to step 4.

4. *Form CAVI community support groups.*

Yemeni community leaders and CAVI project managers will coordinate to create community support groups within the village. These groups can plan to meet every two weeks to discuss farming strategies, learn from each other, and keep resource division organized.

5. *Create a 1-year plan for each community agrivoltaics complex.*

Each Yemeni farmer will work with their community group and CAVI project managers to determine what crops they would like to grow and create goals for crop yields. Suggested crops are those that thrive in partial shade and are suitable to agrivoltaic systems, such as potatoes, spinach, tomatoes, and peppers (Barron-Gafford et al.).

6. *Install agrivoltaic solar panel systems in the village*.

Experts in solar panel installation will install the solar panels, electrical wiring, battery-inverter complexes, and monitoring systems, following the aforementioned map. See Fig. 1 for measurements.

7. *Plant crops in the agrivoltaic farms; coordinate irrigation systems.*

Yemeni farmers, with the guidance of project experts, will plant partial-shade crops. Yemen Aid and international organizations will cover the price of seeds. Apply existing irrigation setups to agrivoltaic farms, unless improvement is needed. Community groups should make irrigation schedules together.

8. *CAVI project managers and experts check in weekly for the first four months to help Yemeni farmers with maintaining the community agrivoltaics farm.*

Check-ins can include bringing more supplies and asking Yemeni participants what resources they need. CAVI project managers and international experts should stay very involved in the first four months, and then taper off their assistance with the goal of allowing Yemeni communities to become self-sufficient.

9. *Harvest and data collection.*

Yemeni farmers will harvest their crops and record their yields.

10. *Long-term maintenance; expansion to other areas of Yemen.*

Solar panels can have a lifetime of over 25 years, meaning that communities have a relatively long period of time before having to think about buying new panels. CAVI managers and experts should check in with communities regularly over time, and if the program is successful in one village, expand to more places.

In contrast to traditional humanitarian aid, this solution prioritizes community involvement and support. Yemeni communities would be actively learning and implementing solutions throughout the process, and hopefully, after a couple years, these communities will be largely self-sufficient.

***Expected Outcomes: (Fig. 3)***

Solar panel shading can protect crops from too much sunlight and can reduce soil erosion, allowing the soil to retain, as shown in some studies, up to 15% more moisture than control groups (DeWalt), (Barron-Gafford et al.). This means that farmers can use less water when irrigating agrivoltaic farms, reducing the issue of water scarcity that has taken over much of the Middle East.

With CAVI, Yemeni farmers can grow a larger variety of crops, allowing them to diversify their diet. This will improve the health of families in Yemen. In addition, crop yields tend to increase in agrivoltaic situations, providing more food for the families of small-scale farmers (Morris).

Community-driven agrivoltaic farming could empower farmers to grow sufficient quantities of food for their families and to sell at markets. More efficient and resilient agricultural practices could significantly increase the supply of food crops in Yemen, potentially lowering prices in local markets, and taming to

some extent the monster of inflation in markets. This means that sustainable agriculture not only benefits farmers, but also the many Yemeni consumers who rely on local markets to feed their families.

While the solar panels help crops grow, the process of transpiration, where moisture evaporates off of plants, cools down solar panels, which improves panel performance (Morris). This drives the efficient, sustainable generation of energy for rural Yemeni communities that is off-grid, meaning it is not reliant on nearby power stations and is not affected by the power outages of a much larger grid. This reliable, cheaper access to clean electricity can be life-changing for some families.

Finally, CAVI is a step on a global march towards environmental sustainability. This solution pairs renewable energy generation with sustainable agriculture, land restoration with water conservation– agrivoltaics packs many benefits into one streamlined solution. CAVI's mission is truly global– it's an initiative to stamp out world hunger, give independence to small-scale farmers, and protect the planet.

**CAVI: Expected Outcomes**

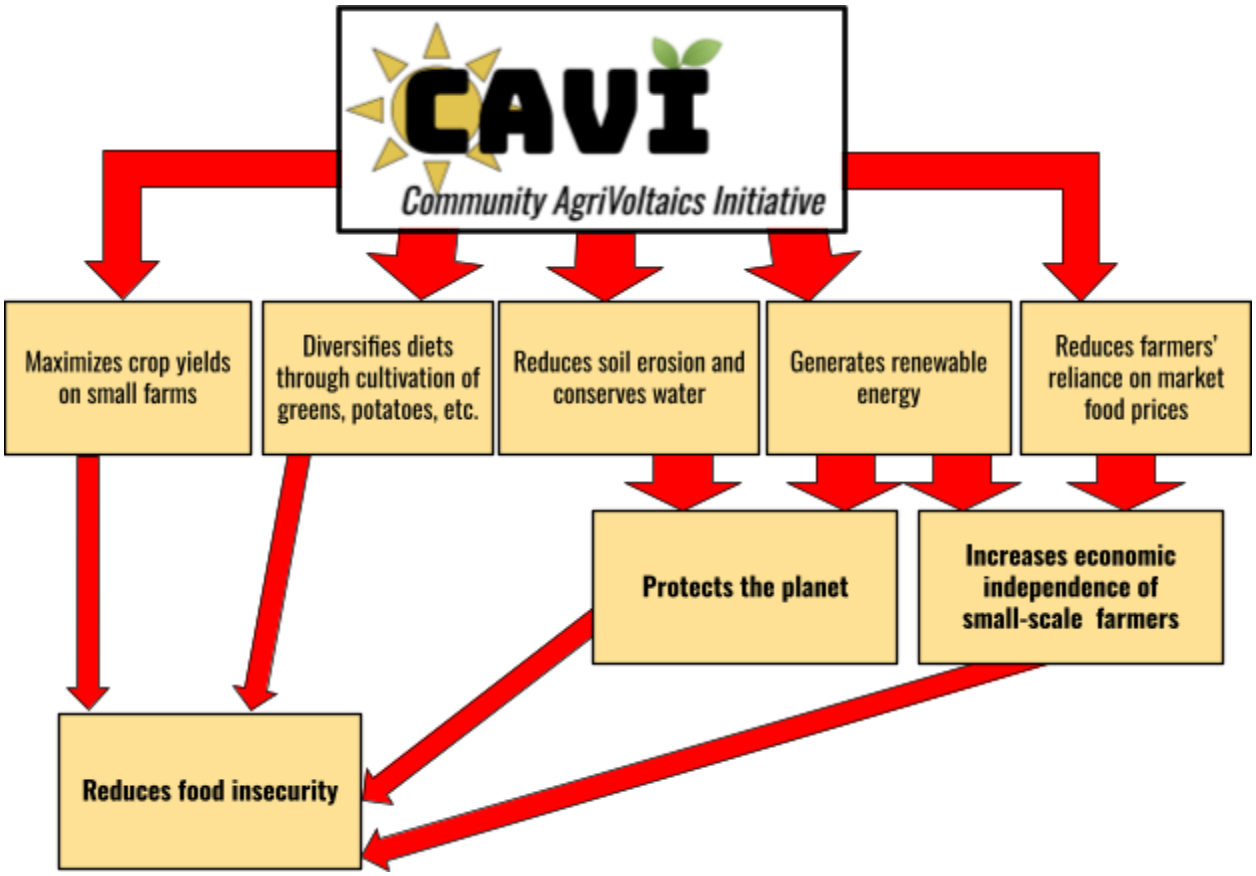


Fig. 3: Expected impact of CAVI when implemented in certain villages in Yemen. All efforts, at their core, strive to create a more food-secure community.

***Impact on Stakeholders:***

- Rural, small-scale farmers and communities in Yemen

Yemeni farmers will benefit the most from this solution. They will benefit from increased crop yields, community support systems, and a path towards long-term recovery and climate adaptability. CAVI works to create more food-secure communities in Yemen, and also to help Yemeni communities come to the cutting-edge of agricultural technology. CAVI can help integrate Yemeni farmers into a food-secure future, fueled by scientific innovation.

- UN organizations - FAO, UNDP, WFP

UN organizations would invest monetarily in this project. CAVI would support the UN's missions to end hunger and protect the planet, thus benefitting the UN as a whole.

- Yemen Aid

Yemen Aid would also invest money and resources into CAVI. Yemen Aid will benefit from this solution, since the support of Yemeni farmers strengthens Yemen as a whole, which can make Yemen Aid stronger as well. CAVI, however, will require a large initial investment from Yemen Aid.

***Conclusion***

Implementing cutting-edge agricultural technology in Yemen would be expensive, involves intense planning, and requires technical expertise from agricultural science experts. This solution also involves risks– installing expensive agricultural technology in a region that would be to some extent involved in violent conflict risks the destruction of these facilities. The implementation of this solution is contingent on the resolution to the civil war in Yemen around the time of or before implementation. Hopefully, a decline in bombing and violence, and ideally, a complete end to the conflict, will be facilitated by the Presidential Leadership Council in Yemen and the United Nations.

Widespread, community-based agrivoltaic farming in Yemen is an ambitious proposal. But severe issues necessitate daring responses– perhaps a highly technical, potentially risky, and expensive solution is necessary to tackle the world's most severe humanitarian crisis. Agricultural technology, community involvement, and international support may be key components in ending hunger in Yemen, supporting the rich histories, cultures, and peoples of an ever-changing world.

**Works Cited**

"A Packet of Rice for a Family of Nine: Why Yemenis Are Starving." *Middle East Eye*, https://www.middleeasteye.net/news/packet-rice-family-nine-why-yemenis-are-starving.

Abdalla, Mohammed E.B, et al. "A Pathway to Food and Energy Security: Agrivoltaic Potential in the MENA Region." *Energy Nexus*, vol. 21, 1 Mar. 2026, p. 100610,

https://www.sciencedirect.com/science/article/pii/S2772427125002487, 10.1016/j.nexus.2025.100610. Accessed 1 Sept. 2026.

"Agrivoltaics: Coming Soon to a Farm Near You? | USDA Climate Hubs." *Www.Climatehubs.Usda.Gov*, https://www.climatehubs.usda.gov/hubs/northeast/topic/agrivoltaics-coming-soon-farm-near-you.

"'Agrivoltaics Designs and Configurations.'" *Nlr.Gov*, 2026, https://docs.nlr.gov/docs/fy25osti/91672.pdf. Accessed 1 Sept. 2026.

"Agrivoltaics: Solar and Agriculture Co-Location." *Energy.Gov*, 2025, https://www.energy.gov/cmei/systems/agrivoltaics-solar-and-agriculture-co-location. Accessed 1 Sept. 2026.

Aid, Yemen. "Food Security - Yemen Aid Humanitarian Services | Resourceful Aiding of Yemen." *Yemen Aid Humanitarian Services | Resourceful Aiding of Yemen*, 19 Feb. 2025, https://yemenaid.org/food-security/.

"Arable Land (% of Land Area) - Yemen, Rep. | Data." *Data.Worldbank.Org*, https://data.worldbank.org/indicator/AG.LND.ARBL.ZS?locations=YE.

Barron-Gafford, Greg A., et al. "Agrivoltaics Provide Mutual Benefits Across the Food–Energy–Water Nexus in Drylands." *Nature Sustainability*, vol. 2, no. 9, 2 Sept. 2019, pp. 848–855, https://www.nature.com/articles/s41893-019-0364-5?utm_source=feedburner&utm_medium=feed&utm_campaign=Feed%3A+natsustain%2Frss%2Fcurrent+%28Nature+Sustainability%29#citeas, 10.1038/s41893-019-0364-5. Accessed 1 Sept. 2026.

Burrowes, Robert. "Yemen - Agriculture, Forestry, and Fishing." *Encyclopædia Britannica*, 2019, https://www.britannica.com/place/Yemen/Agriculture-forestry-and-fishing.

Burrowes, Robert, and Manfred W Wenner. "Yemen | People, History, & Facts." *Encyclopædia Britannica*, 6 Feb. 2019, https://www.britannica.com/place/Yemen.

Castro Fontanella, Dalila. “Cuba: Rethinking Farming to Face the Climate Crisis | World Food Programme.” *Www.Wfp.Org*, 26 Mar. 2024, https://www.wfp.org/stories/cuba-rethinking-farming-face-climate-crisis.

DeWalt, Heath. “The Complete Guide to Planning Your First Agrivoltaic Installation.” *Substack.Com*, Heath’s Substack, 13 Nov. 2024, https://energyfreedom.substack.com/p/the-complete-guide-to-planning-your. Accessed 1 Sept. 2026.

“Easing Yemen’s Food Crisis: Preserving Farmlands in Al-Barakani Valley, Taiz.” *UNDP*, https://www.undp.org/arab-states/stories/easing-yemens-food-crisis-preserving-farmlands-al-barakani-valley-taiz. Accessed 1 Sept. 2026.

*Executive Summary*.

“Farming in the Desert: Equitable and Sustainable Agriculture in Arid Climates | Program on the Environment.” *Program on the Environment*, 2024, https://envstudies.uw.edu/capstone/farming-in-the-desert-equitable-and-sustainable-agriculture-in-arid-climates/.

“Foundational Agrivoltaic Research for Megawatt Scale (FARMS) Funding Program.” *Energy.Gov*, 18 May 2026, https://www.energy.gov/cmei/systems/foundational-agrivoltaic-research-megawatt-scale-farms-funding-program.

“From Barren to Bountiful: Reviving Farmlands in Al-Gharegah Village, Yemen.” *Un.Org*, 2025, https://unsdg.un.org/latest/stories/barren-bountiful-reviving-farmlands-al-gharegah-village-yemen. Accessed 1 Sept. 2026.

“Generating New Employment Opportunities in Yemen.” *Sana’a Center For Strategic Studies*, 17 Oct. 2018, https://sanaacenter.org/publications/main-publications/6564.

Hance, Jeremy. “Oman’s Mountain Oases Offer Ancient Farming Lessons for a Warming Future.” *Mongabay Environmental News*, 18 Mar. 2024, https://news.mongabay.com/2024/03/omans-mountain-oases-offer-ancient-farming-lessons-for-a-warming-future/.

Morris, Frank. “Researchers Aim to Figure out How to Harvest Food and Electricity off the Same Land.” *NPR*, KCUR, 14 May 2024, https://www.npr.org/2024/05/14/1251200110/researchers-aim-to-figure-out-how-to-harvest-food-and-electricity-off-the-same-l?fbclid=IwZXh0bgNhZW0CMTEAAR0vcTmhy40sAyEKRWIFthHo8U3Ch3rQzlvoglDAXQK5YgLV05wJ21rAhOU_aem_AbKZs_x99TiNGIK1kZYpGrvaRD155w7WPlWXS_vl_1ThxHMyDpj8l2jvafC6l8Yoj5ne2yUZ5uyLAoVi7DAfS67D_. Accessed 2 Sept. 2026.

Nasser, Afrah. “Climate Change: A New Battlefield in Yemen’s Ongoing Conflict.” *Arab Center Washington DC*, 3 Oct. 2024, https://arabcenterdc.org/resource/climate-change-a-new-battlefield-in-yemens-ongoing-conflict/.

Pillai, Dhanup S, et al. “Agrivoltaics for Arid Climates: Developments, Technological Trends, and Global Data-Driven Technoeconomic Assessments.” *Renewable and Sustainable Energy Reviews*, vol. 238, 1 Sept. 2026, p. 117056, https://www.sciencedirect.com/science/article/pii/S1364032126003552, 10.1016/j.rser.2026.117056. Accessed 1 Sept. 2026.

“Restoring Clean Water and Bringing Back Life to Farming.” *IOM Yemen*, https://yemen.iom.int/stories/restoring-clean-water-and-bringing-back-life-farming-communities-yemen.

“Rural Population (% of Total Population) - Yemen, Rep. | Data.” *Data.Worldbank.Org*, https://data.worldbank.org/indicator/SP.RUR.TOTL.ZS?locations=YE.

Salem, Ahmed, et al. “Healthcare Accessibility in Yemen’s Conflict Zones: Comprehensive Review Focused on Strategies and Solutions.” *Conflict and Health*, vol. 19, no. 1, 14 July 2025, 10.1186/s13031-025-00685-x.

“Small Scale Agrivoltaics | Sustainable Farming and Energy Solutions in Arid Regions | Kasser Joint Institute.” *Default*, 2020, https://jointinstitute.jnf.org/agrivoltaics. Accessed 1 Sept. 2026.

“Solar Photovoltaic System Design Basics.” *Energy.Gov*, 2025, https://www.energy.gov/cmei/systems/solar-photovoltaic-system-design-basics. Accessed 1 Sept. 2026.

The Aquaponic Source. “What Is Aquaponics.” *The Aquaponic Source*, 2019, https://www.theaquaponicsource.com/what-is-aquaponics/.

“Total Population Yemen| Statista.” *Statista*, 2025, https://www.statista.com/statistics/524126/total-population-of-yemen/?srsltid=AfmBOopA4LkCUCrW6qXea0TXPsLJRHAelMbmoMx2durpiXNSGwBb-Cz1. Accessed 17 Feb. 2026.

Ulstein, Dag-Inge. “In Yemen, despite 2 Years of Truce, the Education Crisis Continues.” *International Parliamentary Network for Education*, 2 May 2024, https://www.ipned.org/news-and-views/yemen-education-crisis.

“UN World Food Programme (WFP).” *Wfp.Org*, 18 Nov. 2025, https://www.wfp.org/stories/kenya-young-and-old-are-joining-forces-heal-land. Accessed 20 Feb. 2026.

“UNDP Yemen: Strengthening Local Systems for Sustainable Food Security in Yemen.” *Yemen*, 2025, https://yemen.un.org/en/298078-undp-yemen-strengthening-local-systems-sustainable-food-security-yemen. Accessed 1 Sept. 2026.

UNICEF. “Water, Sanitation and Hygiene.” *Unicef.Org*, 2022, https://www.unicef.org/yemen/water-sanitation-and-hygiene.

United Nations Foundation. “Yemen: A Brief Background .” *United Nations Foundation*, 2018, https://unfoundation.org/what-we-do/issues/peace-human-rights-and-humanitarian-response/yemen-a-brief-background/.

World Food Programme. “Yemen Emergency.” *WFP.Org*, 2022, https://www.wfp.org/emergencies/yemen-emergency.

“Yemen (YEM) Exports, Imports, and Trade Partners.” *Oec.World*, https://oec.world/en/profile/country/yem.

“Yemen - WOAH - Middle East.” *WOAH - Middle East*, 18 July 2020, https://rr-middleeast.woah.org/en/about-us/regional-members-of-woah/yemen/.

“Yemen Faces Economic Freefall and Devastating Aid Crisis after a Decade of Conflict — Oxfam.” *Oxfamamerica.Org*, 2025, https://www.oxfamamerica.org/press/yemen-faces-economic-freefall-and-devastating-aid-crisis-after-a-decade-of-conflict-oxfam/.

“Yemen Publishes First Labour Force Survey in over 15 Years | International Labour Organization.” *Www.Ilo.Org*, 27 Oct. 2015, https://www.ilo.org/resource/news/yemen-publishes-first-labour-force-survey-over-15-years.

“🇾🇪 Yemen ⚠️ Hunger Crisis from Civil War.” *World Food Program USA*, 22 Oct. 2025, https://wfpusa.org/place/yemen/.